PRACTICAL-5

4-BIT MAGNITUDE OPERATOR

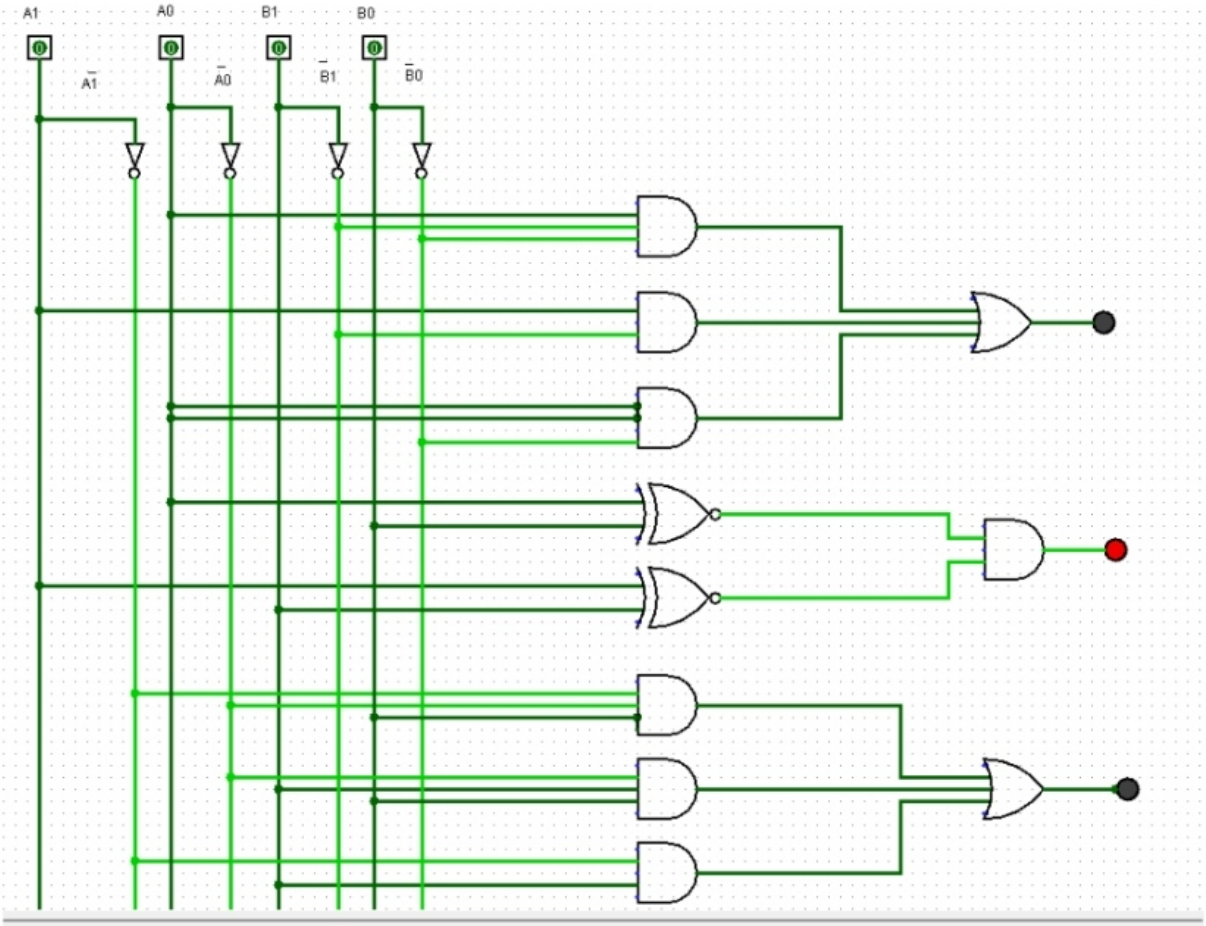

A > B

$$A > B = A_0\overline{B_1}B_0 + A_1\overline{B_1} + A_1A_0\overline{B_0}$$

A = B

$$A = B = \overline{A_1}\,\overline{A_0}\,\overline{B_1}\,\overline{B_0} + \overline{A_1}A_0\overline{B_1}B_0 + A_1\overline{A_0}B_1\overline{B_0} + A_1A_0B_1B_0$$

$$= \overline{A_1B_1}(\overline{A_0B_0} + A_0B_0) + A_1B_1(\overline{A_0B_0} + A_0B_0)$$

$$= (A_0 \odot B_0)(A_1 \odot B_1)$$

A < B

$$A < B = \overline{A_1A_0}B_0 + \overline{A_0}B_1B_0 + \overline{A_1}B_1$$

INPUT				OUTPUT		
A_1	A_0	B_1	B_0	A>B	A=B	A<B
0	0	0	0	0	1	0
0	0	0	1	0	0	1
0	0	1	0	0	0	1
0	0	1	1	0	0	1
0	1	0	0	1	0	0
0	1	0	1	0	1	0
0	1	1	0	0	0	1
0	1	1	1	0	0	1
1	0	0	0	1	0	0
1	0	0	1	1	0	0
1	0	1	0	0	1	0
1	0	1	1	0	0	1
1	1	0	0	1	0	0
1	1	0	1	1	0	0
1	1	1	0	1	0	0
1	1	1	1	0	1	0